Full paper F2

Paper 2 style · Calculator · Foundation

80 marks
1 hour 30 minutes

Name	Date	Score / 80

Answer ALL questions. Write your answers in the spaces provided. You must write down all the stages in your working. You may use a calculator. Diagrams are **NOT** accurately drawn unless it says so.

Help on the longer questions

Underlined words tell you what the question wants.

Remember reminds you of a fact you need.

1 **Write** the following numbers in order of size.
Start with the smallest number.

−6 4 0 −3 1

.....

(1)

(Total for Question 1 is 1 mark)

---

2 **Write** 43% as a fraction.

.....

(1)

(Total for Question 2 is 1 mark)

---

3 **Write down** the 9th even number.

.....

(1)

(Total for Question 3 is 1 mark)

---

4 **Change** 68 centimetres to millimetres.

..... millimetres

(1)

(Total for Question 4 is 1 mark)

Turn over ►

5 Here are four cards.
There is a number on each card.

5	2	8	3

Write down the smallest 4-digit odd number that can be made using each card only once.

.....

(1)

(Total for Question 5 is 1 mark)

---

6 ✎ **Complete this question on paper (printed at actual size)**

Here is a quadrilateral *ABCD*.
It is accurately drawn.

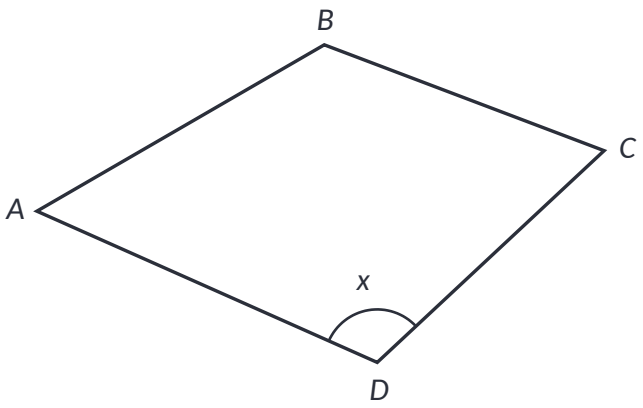

(a) **Measure** the length of the side *AB*.
Give your answer in centimetres.

..... centimetres

(1)

(b) **Measure** the size of the angle marked *x*.

..... °

(1)

(Total for Question 6 is 2 marks)

7 Ben writes down the distance readings from his car at the start and end of a journey.

Start of journey	2	3	5	1	7	**miles**
End of journey	2	3	9	8	2	**miles**

Ben knows that the cost of petrol for this journey is 14p per mile.
Work out the total cost of the petrol used for this journey.
Give your answer in pounds.

> **Remember** Units used = end reading − start reading. Then × the cost of each unit. 100p = £1.

£ .....

(4)

(Total for Question 7 is 4 marks)

8 Leila wants to hire a bike.
She uses this rule to work out the cost of hiring a bike for a number of days.

Cost = £32 × number of days

Leila is going to hire the bike for 9 days.
Work out the cost.

£ .....

(2)

(Total for Question 8 is 2 marks)

9 The table shows information about the number of students who arrived late at school each day one week.

	Number of students
Monday	7
Tuesday	11
Wednesday	5
Thursday	8
Friday	4

On the grid, draw a bar chart for this information.

Remember Check the scale on the axis: what does one square stand for? Label bars and use a ruler.

(3)

(Total for Question 9 is 3 marks)

10 Here is part of a bus timetable between Ashby and Fenton.

Ashby	07 15		07 35		07 50
Brook	07 42		08 02		08 18
Carlton	07 53	08 05	08 13	08 22	08 29
Dent	08 01	08 12	08 21	08 30	08 37
Elm Road	08 07	08 26	08 33	08 41	08 50
Fenton	08 25	08 44	08 51	08 59	09 08

Remember 60 minutes = 1 hour. Count on in steps to the next hour. Read across the row for one bus or train.

(a) How many minutes should the 07 15 bus take to go from Ashby to Dent?

..... minutes

(2)

(b) Kim goes from Brook to Fenton by bus.
One day Kim leaves her house at 07 50
She takes 6 minutes to walk to the bus stop in Brook.
She takes 12 minutes to walk from the bus stop in Fenton to work.
Kim needs to be at work for 09 05
Will Kim get to work for 09 05?
You must show how you get your answer.

(3)

(Total for Question 10 is 5 marks)

11 186 people go on a school trip.
The people on the trip are either adults or children.
There are 16 adults on the trip.
40% of the children on the trip are wearing a cap.
Find the number of children on the trip who are **not** wearing a cap.

> **Remember** Fraction of an amount: ÷ by the bottom, × by the top. Percentage: 10% = ÷ 10, 1% = ÷ 100, or use a multiplier (35% = 0.35).

.....

(4)

(Total for Question 11 is 4 marks)

12

> **Remember** Fraction of an amount: ÷ by the bottom, × by the top. To order fractions, change them to decimals or a common denominator.

(a) **Work out** $\frac{3}{7}$ of 154

.....

(2)

(b) **Write** the following fractions in order of size.
Start with the smallest fraction.

$$\frac{5}{12} \quad \frac{7}{24} \quad \frac{1}{3} \quad \frac{11}{48}$$

.....

(2)

(Total for Question 12 is 4 marks)

13 A shop has two different special offers on juice.

Juice 1 litre	**Juice 2 litres**
90p	£1.60
Buy 3 bottles,	Buy 1 bottle,
get 1 bottle free	get 1 bottle half price

Which offer gives the better value for money?
You must show how you get your answer.

> **Remember** Find the cost of the same amount for each one (e.g. per 100 g or per item), then compare. Write a conclusion.

(4)

(Total for Question 13 is 4 marks)

14

> **Remember** Collect like terms: the same letter (and power) together. Watch the sign in front of each term.

(a) **Simplify** $5a + 6b + 2a - b$

.....

(2)

(b) **Solve** $4(3k - 5) = 52$

$k =$ .....

(3)

(c) There are x pens in a box.
There are y pens in a pack.
Write an expression, **in terms of x and y**, for the total number of pens in 4 boxes and 3 packs.

.....

(2)

(Total for Question 14 is 7 marks)

15 Owen asked his friends how many stamps they each have in their collection.
Here are his results.

63 75 82 71 69 90
77 84 66 72 88 79
95 81 68 74 70

Remember Put the leaves in order and always write a key. Median = the middle value; range = biggest − smallest.

(a) Show this information in a stem and leaf diagram.



Key:

(3)

(b) **Find** the median number of stamps.

.....

(2)

(Total for Question 15 is 5 marks)

16 Water flows through each of the taps that fill a tank at the same rate.
It takes 5 of the taps 18 hours to fill the tank.
Work out how many hours it would take 6 taps to fill $\frac{1}{3}$ of the tank.

Remember Inverse proportion: when one goes up, the other goes down. Multiply to find the total (e.g. workers × hours), then divide.

..... hours

(3)

(Total for Question 16 is 3 marks)

17 The table shows information about the heights of 60 plants.

Height (h cm)	Frequency
$10 < h \leqslant 20$	6
$20 < h \leqslant 30$	12
$30 < h \leqslant 40$	20
$40 < h \leqslant 50$	15
$50 < h \leqslant 60$	7

Work out an estimate for the mean height of the plants.

> **Remember** Mean from a table = total of (value × frequency) ÷ total frequency. For groups, use the midpoint of each group.

..... cm

(3)

(Total for Question 17 is 3 marks)

18 The scatter graph shows information about the midday temperature and the number of hot drinks sold at a café on ten days.

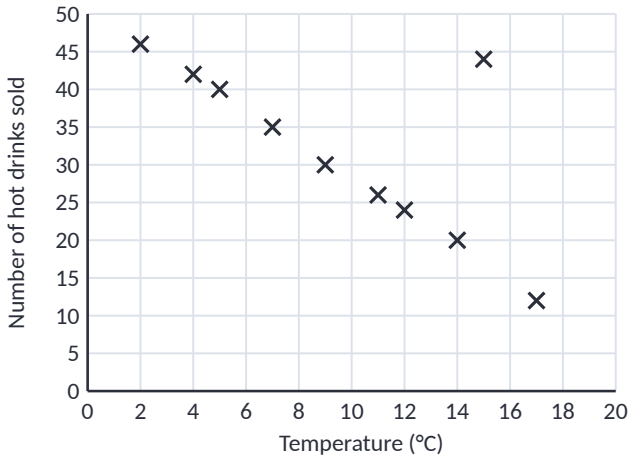

Remember Positive: both go up. Negative: one goes up, the other down. Draw a line of best fit through the middle of the points.

(a) One of the points is an outlier.
Write down the coordinates of this point.

(1)

(b) Ignoring the outlier, describe the relationship between the temperature and the number of hot drinks sold.

(1)

(c) On another day the temperature was 10 °C.
Using the scatter graph, estimate the number of hot drinks sold on this day.

.....

(2)

(Total for Question 18 is 4 marks)

19 The front elevation and the plan of a solid are shown on the grid.
On the grid, draw the side elevation of the solid from the direction of the arrow.

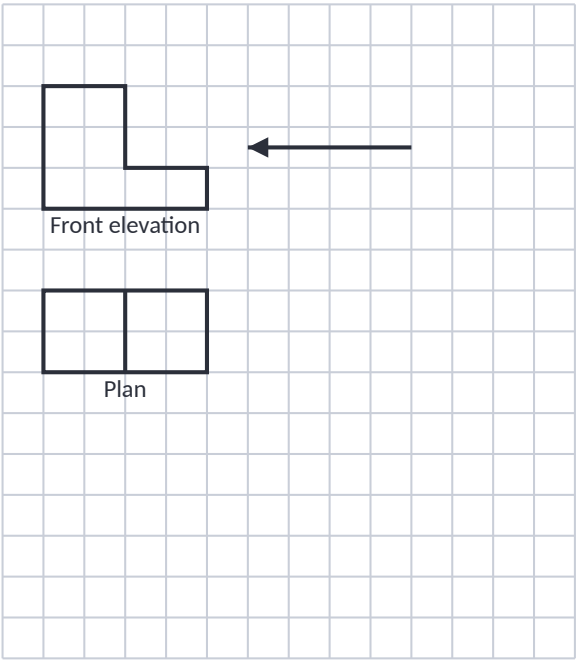

(2)

(Total for Question 19 is 2 marks)

---

20 Here are the first five terms of an arithmetic sequence.

5 9 13 17 21

Remember Find the difference between terms. nth term = difference × n + (first term − difference).

(a) **Find** an expression, **in terms of *n***, for the *n*th term of this sequence.

.....

(2)

(b) The *n*th term of a different sequence is $10 - 4n$
Is −70 a term of this sequence?
You must show how you get your answer.

(2)

(Total for Question 20 is 4 marks)

---

21 The diagram shows a plan of Mia's garden.

ABCO and *DEFO* are rectangles.

CDO is a right-angled triangle.

AFO is a sector of a circle with centre *O* and angle *AOF* = 90°

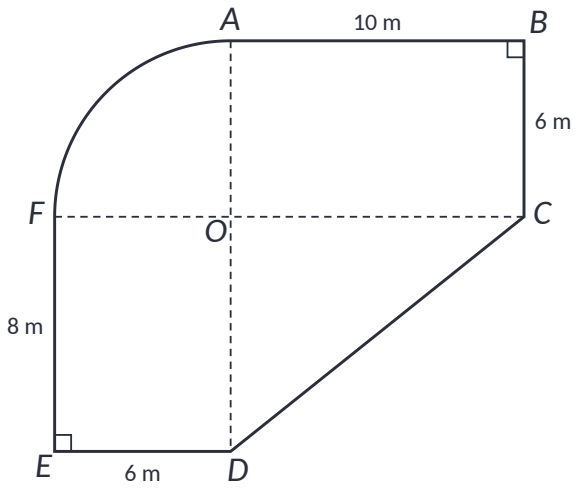

Mia is going to cover her garden with grass seed.

Each bag of grass seed covers 15 m² of garden.

Each bag of grass seed costs £9.80

Work out how much it will cost Mia to buy all the bags of grass seed she needs.

> **Remember** Circumference = π × diameter. Area = π × radius². Radius = half the diameter.

£ .....

(5)

(Total for Question 21 is 5 marks)

22

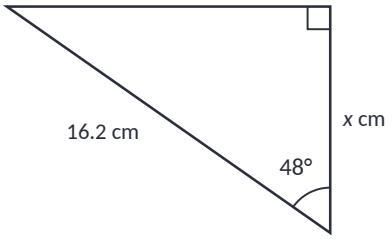

Work out the value of x.
Give your answer **correct to 3 significant figures**.

x = ...

(2)

(Total for Question 22 is 2 marks)

23 Omar invests £6000 for 2 years in an account paying compound interest.
In the first year, the rate of interest is 4%
In the second year, the rate of interest is 2.5%
Work out the value of Omar's investment at the end of 2 years.

> **Remember** Use a multiplier: amount × (1 + rate)^n, e.g. 3% for 4 years → × 1.03^4. Interest = final amount − original.

£ .....

(3)

(Total for Question 23 is 3 marks)

24 Here is the graph of $y = x^2 - 4x - 2$

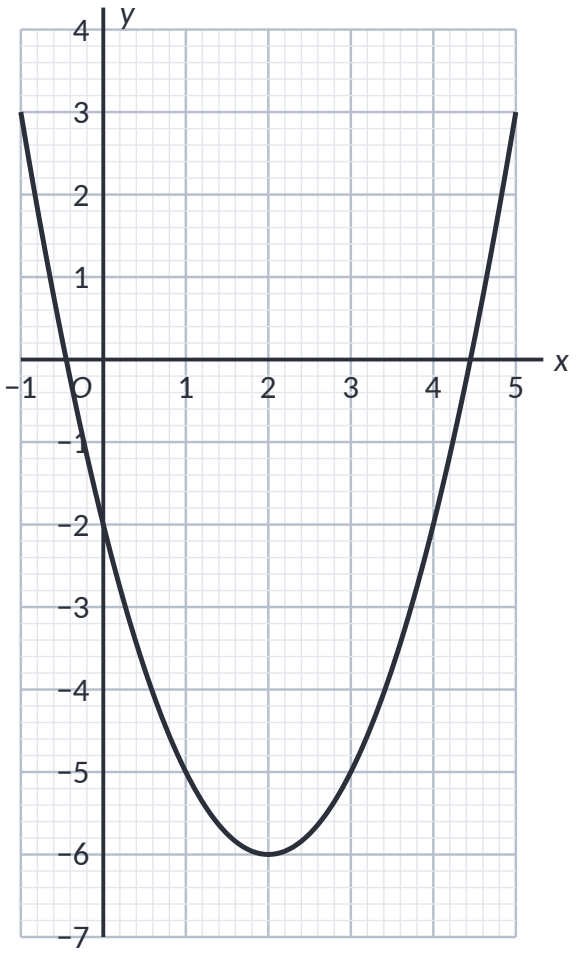

Remember Square first: $(-2)^2 = 4$. Plot each point and join with a smooth curve, not a ruler.

(a) **Write down** the y intercept of the graph of $y = x^2 - 4x - 2$

.....

(1)

(b) **Write down** the coordinates of the turning point of the graph of $y = x^2 - 4x - 2$

(1)

(c) **Use the graph** to find estimates for the roots of $x^2 - 4x - 2 = 0$

.....

(2)

(Total for Question 24 is 4 marks)

25

Remember Halve the rounding unit. Lower bound uses ⩽, upper bound uses <.

(a) **Find** the value of the reciprocal of 0.4

.....

(1)

(b) x = 3600 **correct to 2 significant figures**.
Complete the error interval for x.

(2)

(Total for Question 25 is 3 marks)

---

26 The population of a town increased by 6% between 2021 and 2022
The population in 2022 was 132 500
Calculate the population in 2021

.....

(2)

(Total for Question 26 is 2 marks)

TOTAL FOR PAPER IS 80 MARKS

F2 mark scheme

Q		Answer	Mark	Notes
1		−6, −3, 0, 1, 4	B1	
2		$\frac{43}{100}$	B1	
3		18	B1	
4		680	B1	
5		2385	B1	
6	(a)	4.4	B1	Accept 4.2 to 4.6
	(b)	113	B1	Accept 111 to 115
7		65.10	M1 M1 M1 A1	M1 for 23 982 − 23 517 (= 465) M1 for 465 × 14 (= 6510) M1 for ÷ 100 A1 cao
8		288	M1 A1	M1 for 32 × 9 A1 cao
9		Bars at 7, 11, 5, 8, 4 with labels and a scale	B3	B3 (B2 for 4 correct bars with labels, B1 for a correct scale or labels)
10	(a)	46	M1 A1	M1 for 07 15 to 08 01 A1 cao
	(b)	Yes: she catches the 08 02 bus, arrives in Fenton at 08 51 and gets to work at 09 03	M1 M1 C1	M1 for reaching Brook at 07 56 M1 for the 08 02 bus arriving 08 51 C1 Yes with 09 03
11		102	M1 M1 M1 A1	M1 for 186 − 16 (= 170) M1 for 0.4 × 170 (= 68) or 0.6 × 170 M1 for 170 − 68 A1 cao

Mark scheme continues ►

Q		Answer	Mark	Notes
12	(a)	66	M1 A1	M1 for 154 ÷ 7 × 3 A1 cao
	(b)	$\frac{11}{48}, \frac{7}{24}, \frac{1}{3}, \frac{5}{12}$	M1 A1	M1 for converting to a common denominator or decimals A1 cao
13		The 2 litre offer (60p per litre compared with 67.5p per litre)	M1 M1 M1 C1	M1 for 3 × 90 (= 270) for 4 litres M1 for 1.60 + 0.80 (= 2.40) for 4 litres M1 for comparable values C1 2 litre offer with correct figures
14	(a)	$7a + 5b$	B2	B2 (B1 for one term correct)
	(b)	6	M1 M1 A1	M1 for $12k - 20 = 52$ or $3k - 5 = 13$ M1 for $12k = 72$ or $3k = 18$ A1 cao
	(c)	$4x + 3y$	B2	B2 (B1 for $4x$ or $3y$)
15	(a)	6 | 3 6 8 9 7 | 0 1 2 4 5 7 9 8 | 1 2 4 8 9 | 0 5 Key: 6 | 3 = 63	B2 B1	B2 for a correct ordered diagram (B1 for unordered or one error) B1 for a correct key
	(b)	75	M1 A1	M1 for the 9th value A1 cao
16		5	M1 M1 A1	M1 for 18 × 5 (= 90) M1 for 90 ÷ 6 (= 15) or ÷ 3 A1 cao
17		35.8	M1 M1 A1	M1 for using midpoints M1 for 2150 ÷ 60 A1 for 35.8 to 35.9
18	(a)	(15, 44)	B1	
	(b)	As the temperature increases, fewer hot drinks are sold (negative correlation)	C1	C1
	(c)	28	M1 A1	M1 for a line of best fit or reading at 10 A1 for 26 to 30
19		2 by 3 rectangle with a horizontal line 1 square above the base	B2	B2 (B1 for a 2 by 3 rectangle)

Mark scheme continues ►

Q		Answer	Mark	Notes
20	(a)	$4n + 1$	M1 A1	M1 for $4n + k$ A1 cao
	(b)	Yes: $10 - 4n = -70$ gives $n = 20$, a whole number	M1 C1	M1 for $10 - 4n = -70$ C1 Yes with $n = 20$
21		117.60	M1 M1 M1 M1 A1	M1 for 10×6 (= 60) and 6×8 (= 48) M1 for $\frac{1}{2} \times 10 \times 8$ (= 40) M1 for $\frac{1}{4} \times \pi \times 6^2$ (= 28.27…) M1 for total (176.27…) ÷ 15 and rounding up to 12 A1 cao
22		10.8	M1 A1	M1 for $16.2 \times \cos 48$ A1 for 10.8 (10.83…)
23		6396	M1 M1 A1	M1 for 6000×1.04 (= 6240) M1 for 6240×1.025 A1 cao
24	(a)	−2	B1	
	(b)	(2, −6)	B1	
	(c)	−0.45 and 4.45	B2	B2 for −0.4 to −0.5 and 4.4 to 4.5 (B1 for one correct)
25	(a)	2.5	B1	
	(b)	$3550 \leqslant x < 3650$	B2	B2 (B1 for one end correct)
26		125 000	M1 A1	M1 for $132\,500 \div 1.06$ A1 cao

B1 = mark for a correct answer · **M1** = method mark · **A1** = accurate answer after M1 · **C1** = reason · **cao** = correct answer only

Score ____ / 80

Write your score on the front page